COMPUTER NETWORK LAB

Course Code ENCS352

SUBMITTED TO:

Ms. Jyoti Kaurav

SUBMITTED BY:

Durgesh Kumar

B. Tech CSE (AI&ML)

Roll No. 2301730229

Department of Computer Science and Engineering

School of Engineering and Technology

K.R. Mangalam University, Gurugram

122001, India

INDEX

S. No.	Experiment Title	Date	Page No.	Remarks / Sign
1	(a) CPT Platform Overview	12-01-2026	1	
	(b) Peer to Peer Networks	12-01-2026	1	
2	Network Topologies – (a) Star Topology	19-01-2026	2	
	(b) Ring Topology	02-02-2026	3	
	(c) Mesh Topology	09-02-2026	4	
	(d) Tree Topology	23-02-2026	5	
3	(a) LAN using Hub	02-03-2026	7	
	(b) LAN using Switch	23-03-2026	8	
4	Tracert and Ping commands – Network Diagnostics	23-03-2026	9	
5	(a) Designing the Network (CAN)	30-03-2026	6	
	(b) Static IP Address Assignment to devices in the Network	06-04-2026	10	
6	IP and Subnetting – IP Configuration (Implementing the Concept)	06-04-2026	11	
7	Wireless Home Network – Router Configuration	13-04-2026	12	
8	Capstone Project	20-04-2026	14	
9	Campus Area Network	13-4-2026	16	

Experiment No. 1

Peer to Peer Network and Basic Commands

To create a simple Peer-to-Peer network between two computers and practice basic networking commands such as ipconfig, ipconfig /all, and ping using Cisco Packet Tracer.

Tools Used:

Cisco Packet Tracer (Version 8.x)

Procedure:

1. Open Cisco Packet Tracer and select a new blank logical workspace.
2. Add two PC-PT devices from the End Devices panel.
3. Connect them using a Copper Cross-Over cable.
4. Click on PC0 > Desktop > IP Configuration: IP=10.10.10.1, Subnet=255.0.0.0.
5. Click on PC1: IP=10.10.10.2, Subnet=255.0.0.0.
6. Open Command Prompt on PC0 and run: ipconfig, ipconfig /all, ping 10.10.10.2.
7. Observe successful ping replies confirming peer-to-peer connectivity.

Output / Screenshot:

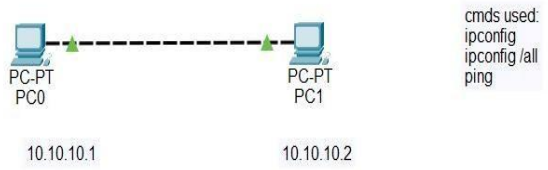

Fig. 1: Peer to Peer Network and Basic Commands

Result:

The experiment "Peer to Peer Network and Basic Commands" was successfully completed using Cisco Packet Tracer. The network was configured as per the aim and connectivity was verified.

Experiment No. 2

Star Topology

To design and implement a Star Topology network using a Hub and multiple PCs in Cisco Packet Tracer and verify connectivity between all nodes.

Tools Used:

Cisco Packet Tracer (Version 8.x)

Procedure:

1. Open Cisco Packet Tracer and create a new logical workspace.
2. Add one Hub-PT from Network Devices > Hubs panel.
3. Add three PC-PT devices from End Devices.
4. Connect each PC to the Hub using Copper Straight-Through cables.
5. Assign IPs: PC0=192.168.0.3, PC1=192.168.0.1, PC2=192.168.0.2, Subnet=255.255.255.0.
6. Ping between all PCs to verify connectivity.
7. Observe star topology with Hub at center of the network.

Output / Screenshot:

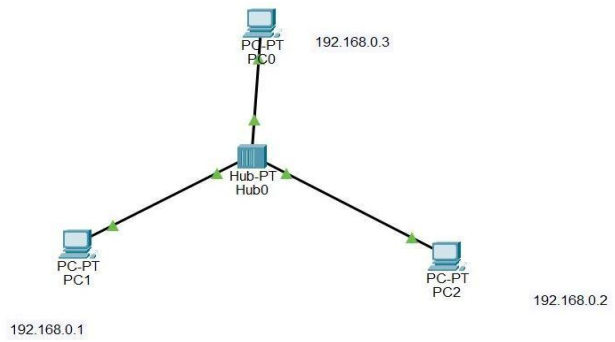

Fig. 2: Star Topology

Result:

The experiment "Star Topology" was successfully completed using Cisco Packet Tracer. The network was configured as per the aim and connectivity was verified.

Experiment No. 3

Ring Topology

To design and implement a Ring Topology network using Switches and multiple PCs in Cisco Packet Tracer, enabling data communication in a ring pattern.

Tools Used:

Cisco Packet Tracer (Version 8.x)

Procedure:

1. Open Cisco Packet Tracer and create a new blank workspace.
2. Add four 2960-24TT Switches (Switch0, Switch1, Switch2, Switch3).
3. Connect switches in a ring pattern: Switch1-Switch0-Switch3-Switch2-Switch1.
4. Add one PC to each switch: PC3 on Switch0, PC0 on Switch1, PC2 on Switch2, PC1 on Switch3.
5. Assign IPs: PC3=10.0.0.1, PC0=10.0.0.2, PC2=10.0.0.3, PC1=10.0.0.4, Subnet=255.0.0.0.
6. Verify connectivity by pinging between PCs through the ring.

Output / Screenshot:

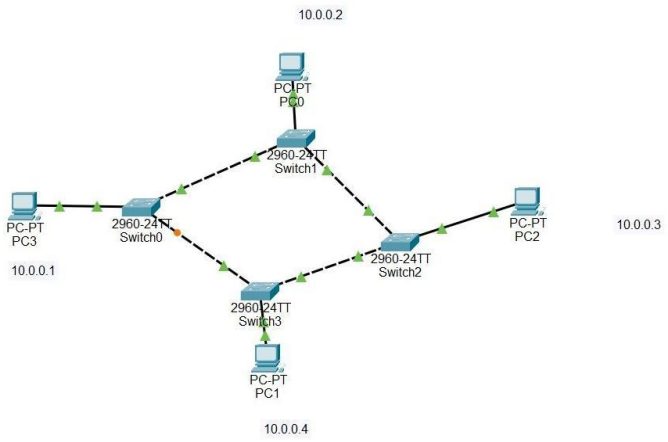

Fig. 3: Ring Topology

Result:

The experiment "Ring Topology" was successfully completed using Cisco Packet Tracer. The network was configured as per the aim and connectivity was verified.

Mesh Topology

To design and implement a Mesh Topology network where multiple switches and PCs are interconnected with redundant paths to ensure fault tolerance.

Tools Used:

Cisco Packet Tracer (Version 8.x)

Procedure:

1. Open Cisco Packet Tracer and add four 2960-24TT Switches.
2. Connect all switches to each other using Cross-Over cables (mesh connections).
3. Add one PC-PT to each switch.
4. Assign IPs: PC1=10.0.0.1, PC2=10.0.0.2, PC3=10.0.0.3, PC0=10.0.0.4, Subnet=255.0.0.0.
5. Verify multiple redundant paths by pinging between PCs.
6. Observe that mesh topology provides fault tolerance.

Output / Screenshot:

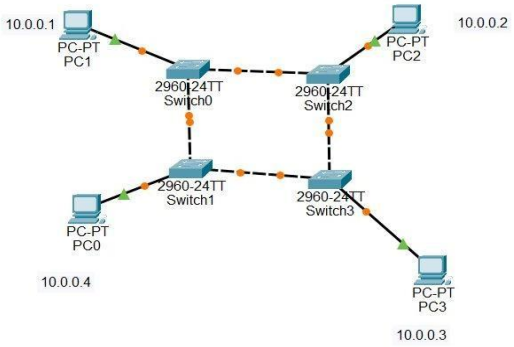

Fig. 4: Mesh Topology

Result:

The experiment "Mesh Topology" was successfully completed using Cisco Packet Tracer. The network was configured as per the aim and connectivity was verified.

Experiment No. 5

Tree Topology

To design and implement a Tree Topology (hierarchical topology) using multiple switches and PCs in Cisco Packet Tracer, demonstrating a hierarchical network structure.

Tools Used:

Cisco Packet Tracer (Version 8.x)

Procedure:

1. Open Cisco Packet Tracer and add three Switch-PT devices (Switch0 as root).
2. Connect Switch0 to Switch1 and Switch0 to Switch2 (cross-over cables).
3. Add three PCs under Switch1 (PC0, PC1, PC2) and three PCs under Switch2 (PC3, PC4, PC5).
4. Assign IPs: PC0=192.168.0.1, PC1=192.168.0.2, PC2=192.168.0.3, PC3=192.168.0.4, PC4=192.168.0.5, PC5=192.168.0.6.
5. Set Subnet Mask=255.255.255.0 for all PCs.
6. Verify tree structure and connectivity using ping between all nodes.

Output / Screenshot:

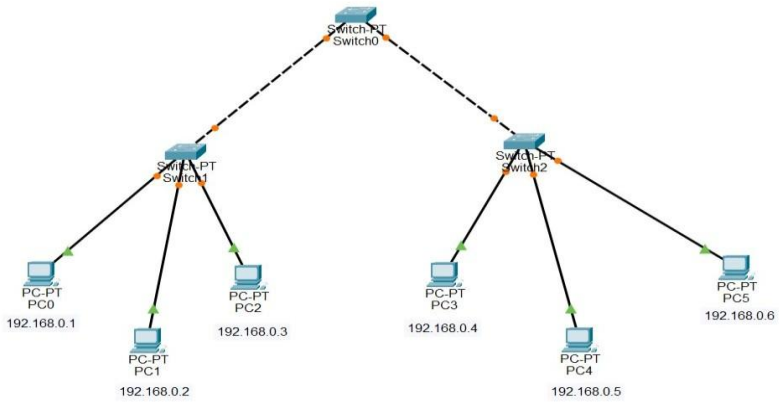

Fig. 5: Tree Topology

Result:

The experiment "Tree Topology" was successfully completed using Cisco Packet Tracer. The network was configured as per the aim and connectivity was verified.

Router - Inter LAN Communication

To configure a Router for Inter-LAN communication between two different LANs with different IP schemes and verify connectivity using Cisco Packet Tracer.

Tools Used:

Cisco Packet Tracer (Version 8.x)

Procedure:

1. Open Cisco Packet Tracer and add one 2911 Router, two 2960-24TT Switches, and four PCs.
2. Connect Switch0 to Router GigabitEthernet 0/1; Switch1 to Router GigabitEthernet 0/2.
3. Assign LAN1: PC0=10.0.0.1, PC1=10.0.0.2, Subnet=255.0.0.0.
4. Assign LAN2: PC2=192.168.1.2, PC3=192.168.1.1, Subnet=255.255.255.0.
5. Configure Router interfaces via CLI: G0/1 IP=10.0.0.3, G0/2 IP=192.168.1.3. Note: Router ports are OFF by default - run 'no shutdown'.
6. Verify Inter-LAN communication by pinging from LAN1 to LAN2.

Output / Screenshot:

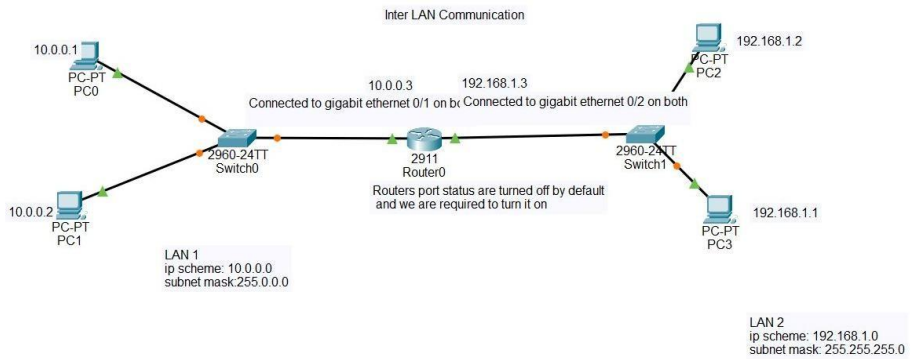

Fig. 6: Router - Inter LAN Communication

Result:

The experiment "Router - Inter LAN Communication" was successfully completed using Cisco Packet Tracer. The network was configured as per the aim and connectivity was verified.

LAN using Hub

To create a Local Area Network (LAN) using a Hub device, connect multiple PCs with appropriate IP addresses, and understand the broadcast behavior of a hub.

Tools Used:

Cisco Packet Tracer (Version 8.x)

Procedure:

1. Open Cisco Packet Tracer and add one Hub-PT from Network Devices.
2. Add six PC-PT devices from End Devices.
3. Connect all PCs to the Hub using Copper Straight-Through cables.
4. Assign IPs: PC0=192.168.0.1, PC1=192.168.0.2, PC2=192.168.0.3, PC3=192.168.0.4, PC4=192.168.0.5, PC5=192.168.0.6.
5. Set Subnet Mask=255.255.255.0 for all PCs.
6. Ping from PC0 to all others and observe broadcast behavior of Hub.

Output / Screenshot:

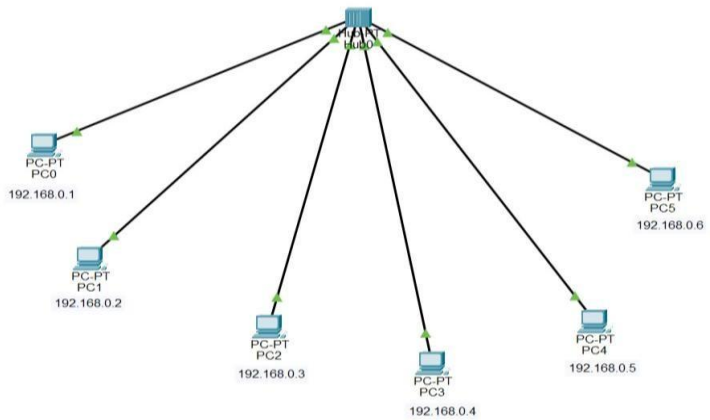

Fig. 10: LAN using Hub

Result:

The experiment "LAN using Hub" was successfully completed using Cisco Packet Tracer. The network was configured as per the aim and connectivity was verified.

Experiment No. 8

LAN using Switch

To create a Local Area Network (LAN) using a Switch, connect multiple PCs with appropriate IP addresses, and understand the unicast behavior of a switch.

Tools Used:

Cisco Packet Tracer (Version 8.x)

Procedure:

1. Open Cisco Packet Tracer and add one 2960-24TT Switch.
2. Add five PC-PT devices from End Devices.
3. Connect all PCs to the Switch using Copper Straight-Through cables.
4. Assign IPs: PC0=192.168.1.1, PC1=192.168.1.2, PC2=192.168.1.3, PC3=192.168.1.4, PC4=192.168.1.6, Subnet=255.255.255.0.
5. Ping between PCs to verify connectivity.
6. Observe Switch unicast behavior - forwards data only to the intended destination MAC.

Output / Screenshot:

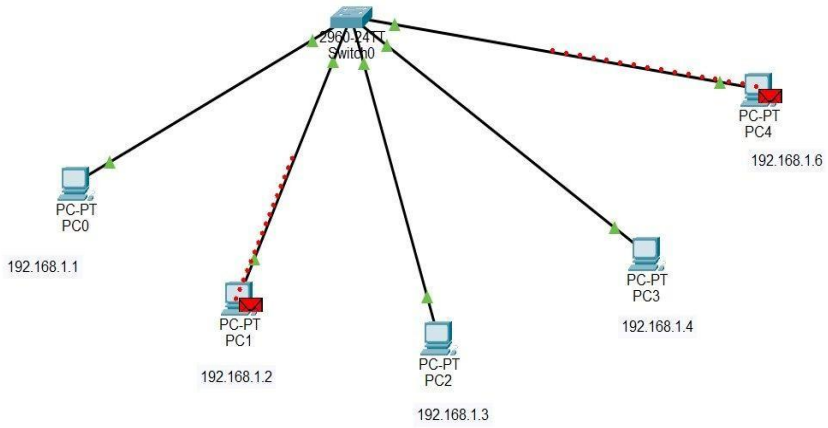

Fig. 11: LAN using Switch

Experiment No. 9

Static IP Address Assignment to Devices in Network

To assign static IP addresses to all devices (PCs) in a network with a router and switch, and verify end-to-end connectivity.

Tools Used:

Cisco Packet Tracer (Version 8.x)

Procedure:

1. Open Cisco Packet Tracer and add one 2911 Router and one 2960-24TT Switch.
2. Add three PC-PT devices; connect them to the Switch.
3. Connect the Switch to Router's GigabitEthernet interface.
4. Click each PC > Desktop > IP Configuration; assign static IPs.
5. Assign: PC0=192.168.1.2, PC1=192.168.1.3, PC2=192.168.1.4, Subnet=255.255.255.0.
6. Set Default Gateway to the Router's interface IP for each PC.
7. Ping between PCs and to the Router to verify static IP assignment is correct.

Output / Screenshot:

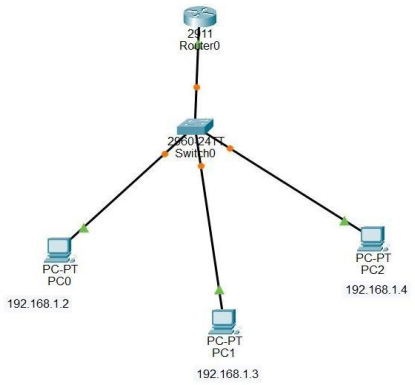

Fig. 12: Static IP Address Assignment to Devices in Network

Result:

The experiment "Static IP Address Assignment to Devices in Network" was successfully completed using Cisco Packet Tracer. The network was configured as per the aim and connectivity was verified.

IP Address Configuration

To configure IP addresses on a Router's interfaces (G0/0, G0/1, G0/2), assign IPs to PCs across multiple subnets, and verify connectivity using ping.

Tools Used:

Cisco Packet Tracer (Version 8.x)

Procedure:

1. Open Cisco Packet Tracer and add one 2911 Router, three 2960-24TT Switches, three PCs.

2. Connect PC1 to SW1, SW1 to Router G0/0. PC2 to SW2, SW2 to G0/1. PC3 to SW3, SW3 to G0/2.

3. Configure Router hostname using CLI: hostname R1.

4. Use 'show ip interface brief' to view current interface status.

5. Configure G0/0: IP=15.255.255.254/8, G0/1: IP=182.98.255.254/16, G0/2: IP=201.191.20.254/24.

6. Enable all interfaces with 'no shutdown'. Add descriptions. Save config.

7. Assign PCs: PC1=15.0.0.1, PC2=182.98.0.1, PC3=201.191.20.1.

8. Ping from PC1 to PC2 and PC3 to verify multi-subnet connectivity.

Output / Screenshot:

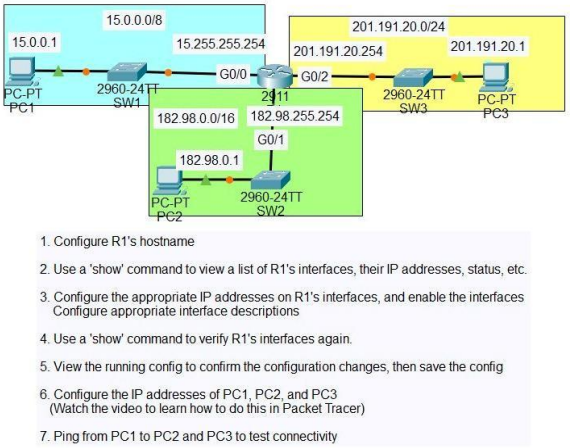

Fig. 9: IP Address Configuration

Subnetting Lab 1 - Initial

To perform subnetting on 192.168.1.0/24, divide it into four subnets, configure routers R1 and R2, and verify that PCs can access external servers (cisco.com, facebook.com).

Tools Used:

Cisco Packet Tracer (Version 8.x)

Procedure:

1. Open Cisco Packet Tracer with subnetting lab template.
2. Divide 192.168.1.0/24 into 4 subnets: /26 each (64 hosts per subnet).
3. Subnet1=192.168.1.0/26 (Site 1), Subnet2=192.168.1.64/26 (R1-IntRouter link).
4. Subnet3=192.168.1.128/26 (Site 2), Subnet4=192.168.1.192/26 (R2-IntRouter link).
5. Configure R1: G0/0/0 Last IP for Site1 LAN, S0/1/0 First IP for WAN.
6. Configure R2: G0/0/0 Last IP for Site2 LAN, S0/1/0 First IP for WAN.
7. Configure IntRouter: S0/1/0 Last IP (R1 side), S0/1/1 Last IP (R2 side).
8. Verify PCs can access cisco.com and facebook.com through their web browsers.

Output / Screenshot:

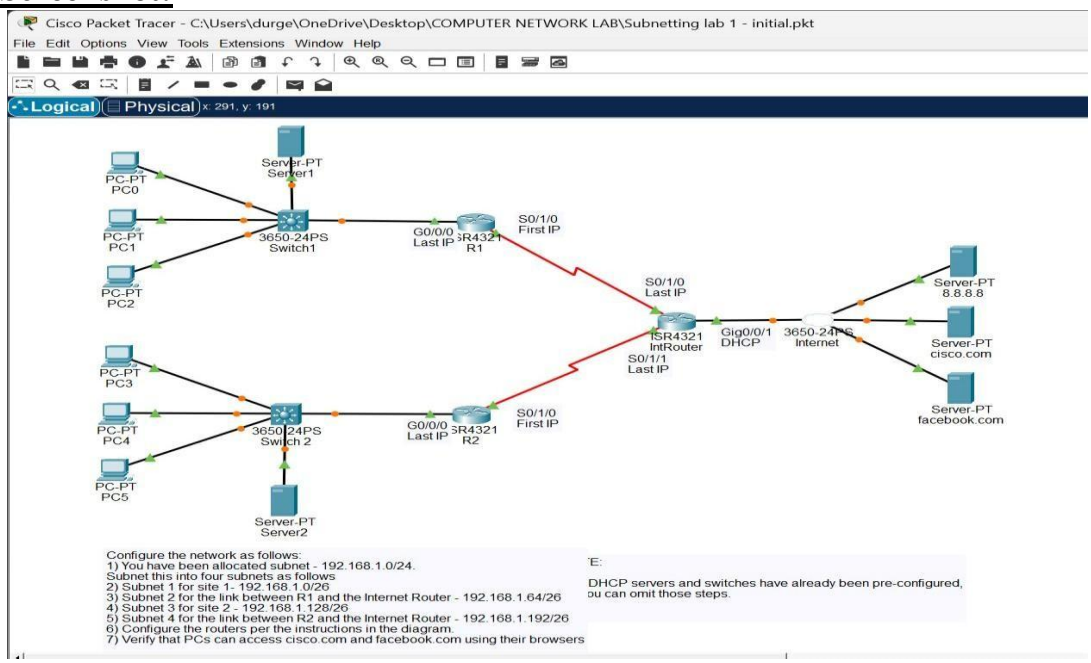

Fig. 13: Subnetting Lab

Home Network

To simulate a Home Network setup in Cisco Packet Tracer using a Home Router, Cable Modem, PC, Laptop, and ISP Cloud with connectivity to external servers.

Tools Used:

Cisco Packet Tracer (Version 8.x)

Procedure:

1. Open Cisco Packet Tracer and add a WRT300N Home Router.
2. Add one Cable Modem, one PC-PT (Miguel's PC), one Laptop-PT (Miguel's Laptop).
3. Connect PC and Laptop to the Home Router via Ethernet.
4. Connect Home Router to Cable Modem; Cable Modem to AT&T ISP Cloud.
5. Connect ISP Cloud to Cisco.com Server.
6. Configure Router WAN to get IP from ISP via DHCP.
7. Verify home network: ping from PC and Laptop to external server.

Output / Screenshot:

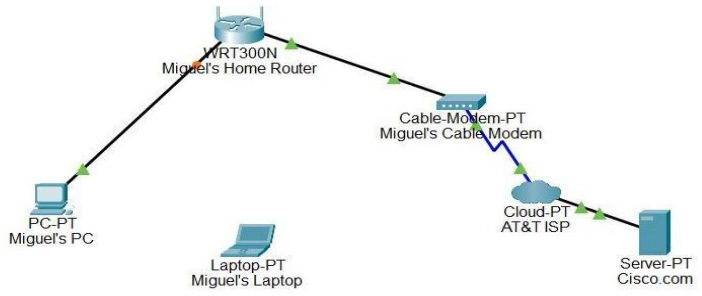

Fig. 8: Home Network

Result:

The experiment "Home Network" was successfully completed using Cisco Packet Tracer. The network was configured as per the aim and connectivity was verified.

Designing a Data Center Network with Scalable VTP and EtherChannel

Aim:
To design and configure a data center network using VTP and EtherChannel, and verify connectivity between devices.

Tools Used:
Cisco Packet Tracer (Version 8.x)

Procedure:

1. Open Cisco Packet Tracer and add one **3560 Multilayer Switch** and two **2960-24TT Switches**.
2. Add four PCs (PC0, PC1, PC2, PC3) and connect them to the access switches.
3. Connect both switches to the multilayer switch using multiple links.
4. Configure VLANs:
   - VLAN 10 → 192.168.10.0/24
   - VLAN 20 → 192.168.20.0/24
5. Configure VTP:
   - Multilayer Switch → Server mode
   - Access Switches → Client mode
6. Configure EtherChannel between switches for link aggregation.
7. Assign static IP addresses:
   - PC0 → 192.168.10.1
   - PC2 → 192.168.10.2
   - PC1 → 192.168.20.1
   - PC3 → 192.168.20.2
8. Enable inter-VLAN routing on the multilayer switch.
9. Use ping command to verify connectivity between devices.

Output / Screenshot:

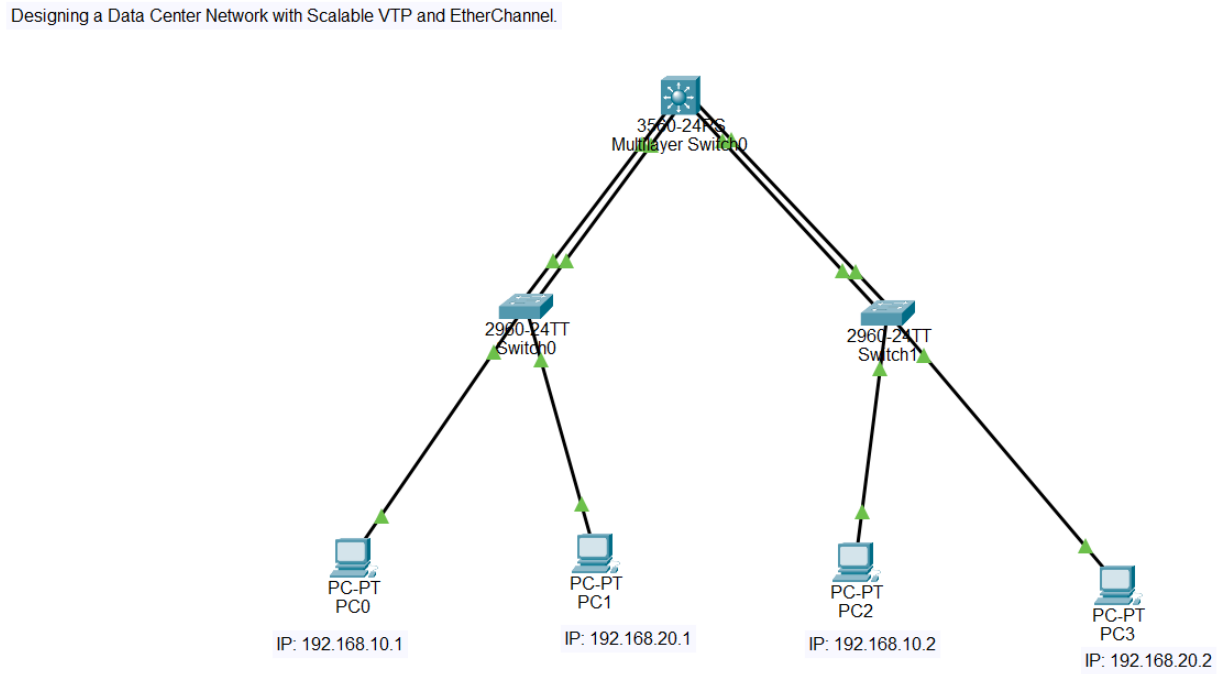

Fig: Data Center Network using VTP and EtherChannel

Campus Area Network

To design a comprehensive Campus Area Network (CAN) integrating multiple departments, hostels, a data center, and Internet Service Provider using VLANs, routers, and switches.

Tools Used:

Cisco Packet Tracer (Version 8.x) Campus Area Network

Procedure:

1. Open Cisco Packet Tracer with a large workspace for CAN design.
2. Add ISP using Router R1 connected to Internet cloud.
3. Set up Data Center with FTP, DNS, HTTP, SMTP servers connected to ASA firewall.
4. Create Network Admin section with IDS, ASA, and Admin PC.
5. Set up Reception area with Reception PC and Director's Laptop.
6. Configure Boys Hostel (4 hostels A,B,C,D) using VLANs 50 and 60.
7. Configure Girls Hostel (4 hostels) using VLANs 70 and 80.
8. Set up 6 Departments (Computer, IT, Electronics, ET, Mechanical) with VLANs 10,20,30,40.
9. Add Library switch with PCs. Configure OSPF area 0 on all routers.
10. Apply security features: DHCP Snooping, ARP Spoofing, MAC table overflow protection.

Output / Screenshot:

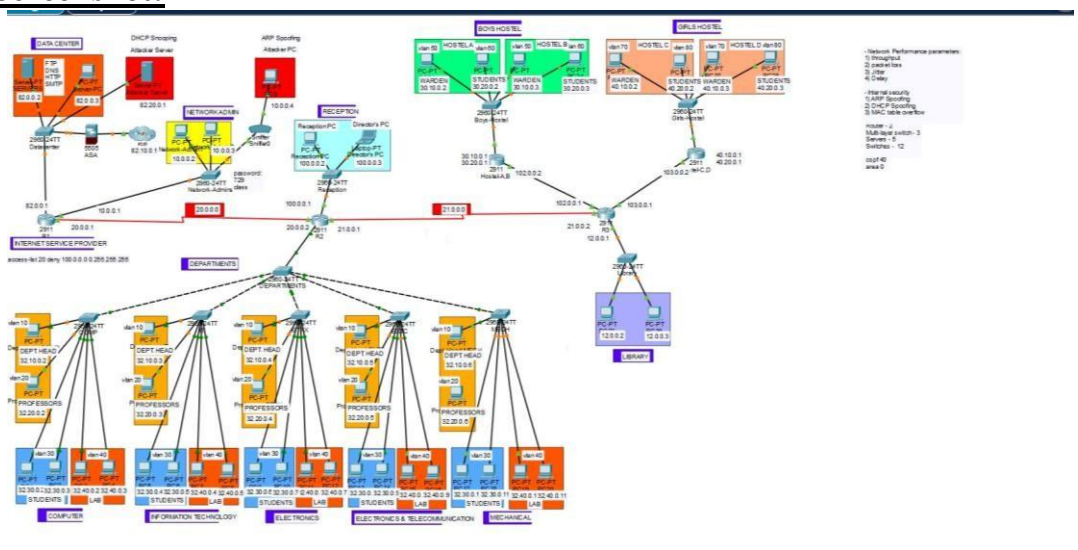

Fig. 7: Campus Area Network